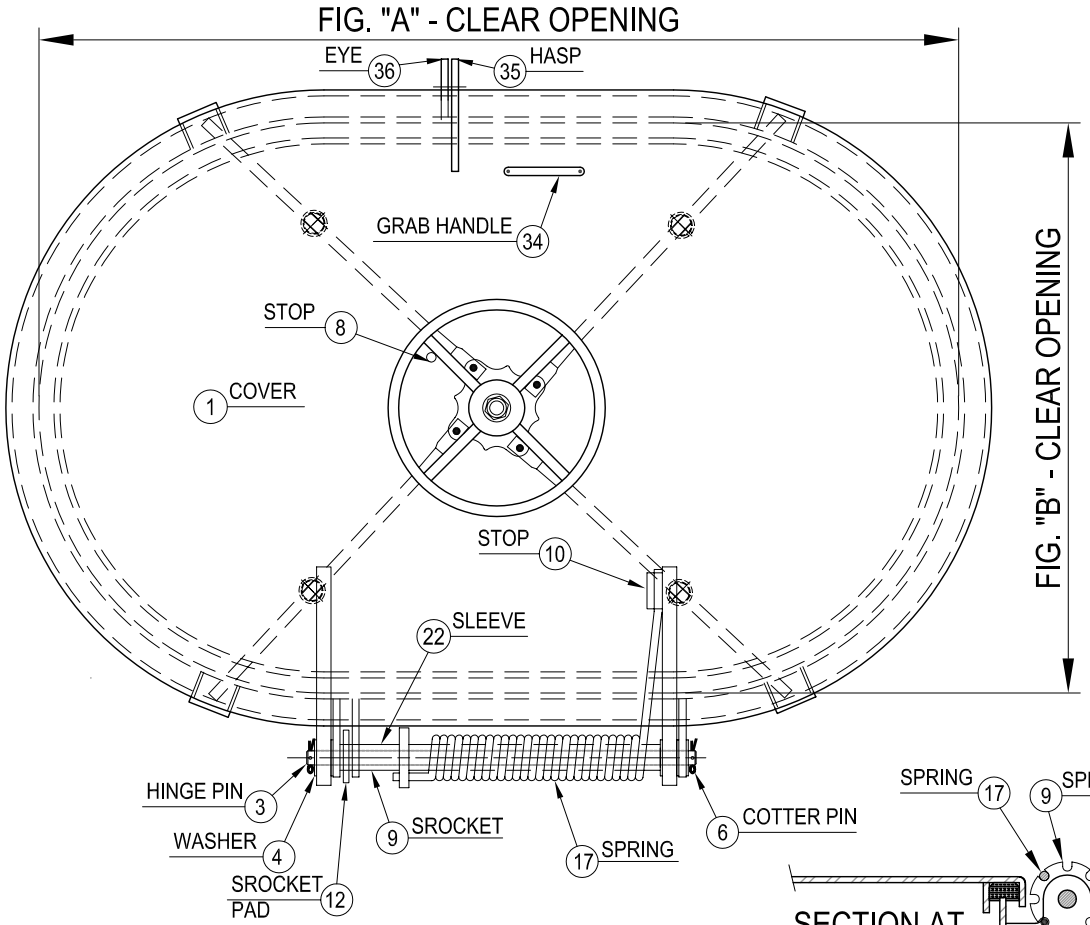

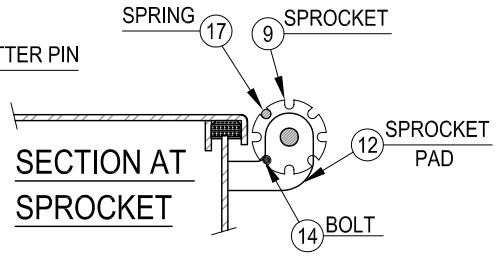

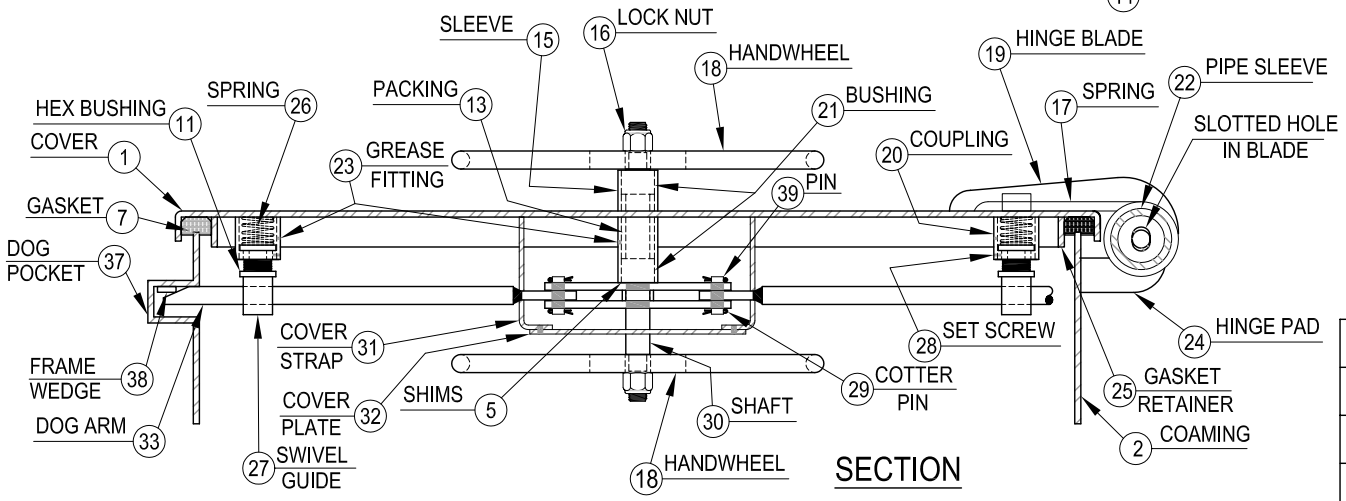

SCHEDULE OF MATERIALS

PC.	MATERIAL	REMARKS
1	MILD STEEL	
2	MILD STEEL	
3	COLD FINISH	
4	STAINLESS	
5	STAINLESS	
6	STAINLESS	
7	NEOPRENE	
8	MILD STEEL	
9	MILD STEEL	
10	MILD STEEL	
11	BRASS	
12	MILD STEEL	
13	TEFLON	
14	PLATED STEEL	
15	MILD STEEL	
16	PLATED STEEL	
17	SPRING STEEL	
18	MILD STEEL	
19	MILD STEEL	
20	MILD STEEL	
21	DELRIN	
22	MILD STEEL	
23	PLATED STEEL	
24	MILD STEEL	
25	MILD STEEL	
26	SPRING STEEL	
27	BRASS	
28	PLATEDSTEEL	
29	STAINLESS	
30	COLD FINISH	
31	MILD STEEL	
32	MILD STEEL	
33	COLD FINISH	
34	MILD STEEL	
35	MILD STEEL	
36	MILD STEEL	
37	MILD STEEL	
38	FORGED STEEL	
39	BRASS	

FREEMAN MARINE EQUIPMENT

Gold Beach, Oregon, USA

SPRING ASSIST, QUICK ACTING WATERTIGHT RAISED OVAL HATCH

DWG. NO.: 215-MS